ROCO M-Range

SPECIFICATION SHEET

November 2019

ROCO Magnet Range

Roco supply a wide range of magnet metal separation equipment for both ferrous and non-ferrous metals.

Whether it's for the recovery of valuable metals, or the protection of machinery, the M Range of metal separation products have been designed and manufactured using the latest technology.

Our M Range has been developed to work in a wide range of industries such as recycling, quarrying, mining, cement, timber, power stations, refineries and many general mineral processing applications.

All Roco M Range equipment is certified to the appropriate international standard and comes with a 12 month parts warranty against manufacturing defects.

We have a highly trained and experienced team of application engineers who are pleased to advise on all of your technical requirements.

For the extraction of FERROUS metals such as mild steel, carbon steel, cast and wrought iron etc.

Our M Range units all contain our high strength strontium ferrite ceramic magnets designed and configured to achieve high extraction rates.

Whether for the recovery of valuable ferrous metals, or for the protection of machinery, our M range of permanent magnets can be used on most applications such as :

- Extract and protect
- High strength magnets
- Permanently magnetised
- Across or inline applications
- Fast deliveries
- Easily installed
- Wide range of units

ROCO Permanent Magnet blocks

Suspended above the conveyor, these magnets are designed to extract ferrous metals from a conveyed stream of materials achieving operating gaps of up to 350mm. These magnets require no external power supply.

OPTIONAL EXTRAS

- Stripper cleaning plate
- Suspension chains

Suitable for all mechanical applications

Various magnet sizes available to suit your requirements

ROCO M680 Overband Steel Magnet

- Heavy duty cleated belt.
- 4x suspension hooks installed
- Suitable for suspending over 400mm – 750mm belt
- Weight 700kgs
- Maximum operating Gap: 300mm

Available in Hydraulic or electric motor drive.

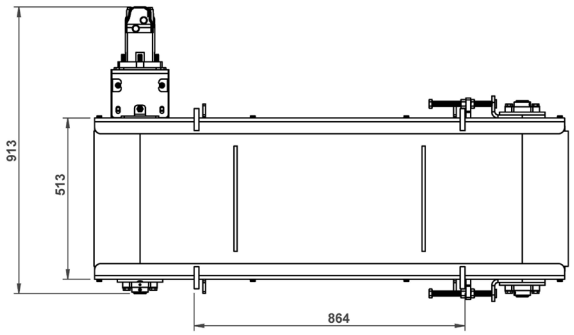

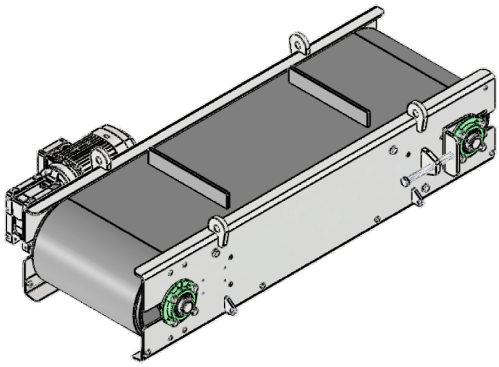

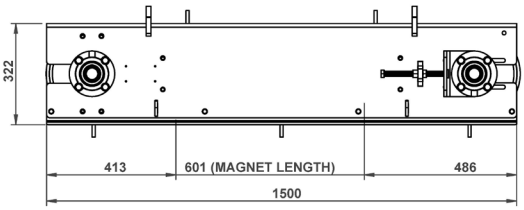

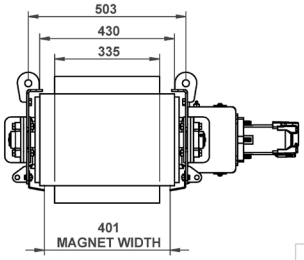

ROCO

Title: M680 HYD LAYOUT DRAWING	QTY:
	DRAWN BY: PF
	REVISION:
	SCALE:1:15 :A4: SHEET 1 OF 1
ALL DRAWINGS ARE PROPERTY ROCO AND SHOULD NOT BE REPRODUCED OR DISTRIBUTED WITHOUT PERMISSION COPYRIGHT © ROCO	Date: 07/11/2018
	DWG no.

ROCO M810 Overband Steel Magnet

- Heavy duty cleated belt.
- 4x suspension hooks installed
- Suitable for suspending over 700mm – 1000mm belt
- Weight 900kgs
- Maximum operating Gap: 300mm

Available in Hydraulic or electric motor drive.

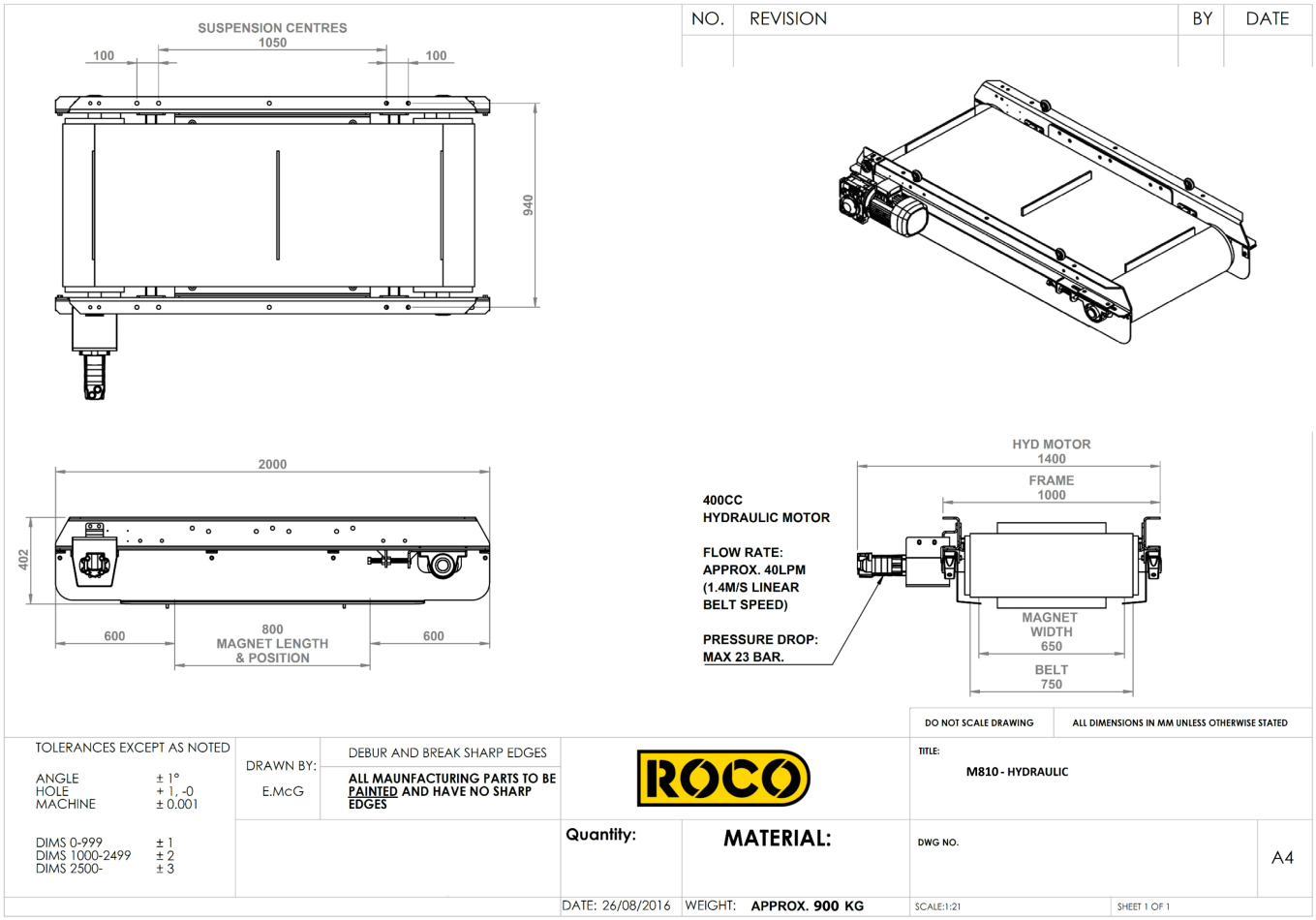

ROCO M1200 Overband Steel Magnet

- Heavy duty cleated belt.
- 4x suspension hooks installed
- Suitable for suspending over 900mm – 1200mm belt
- Weight 1050kgs
- Maximum operating Gap: 300mm

Available in Hydraulic or electric motor drive.

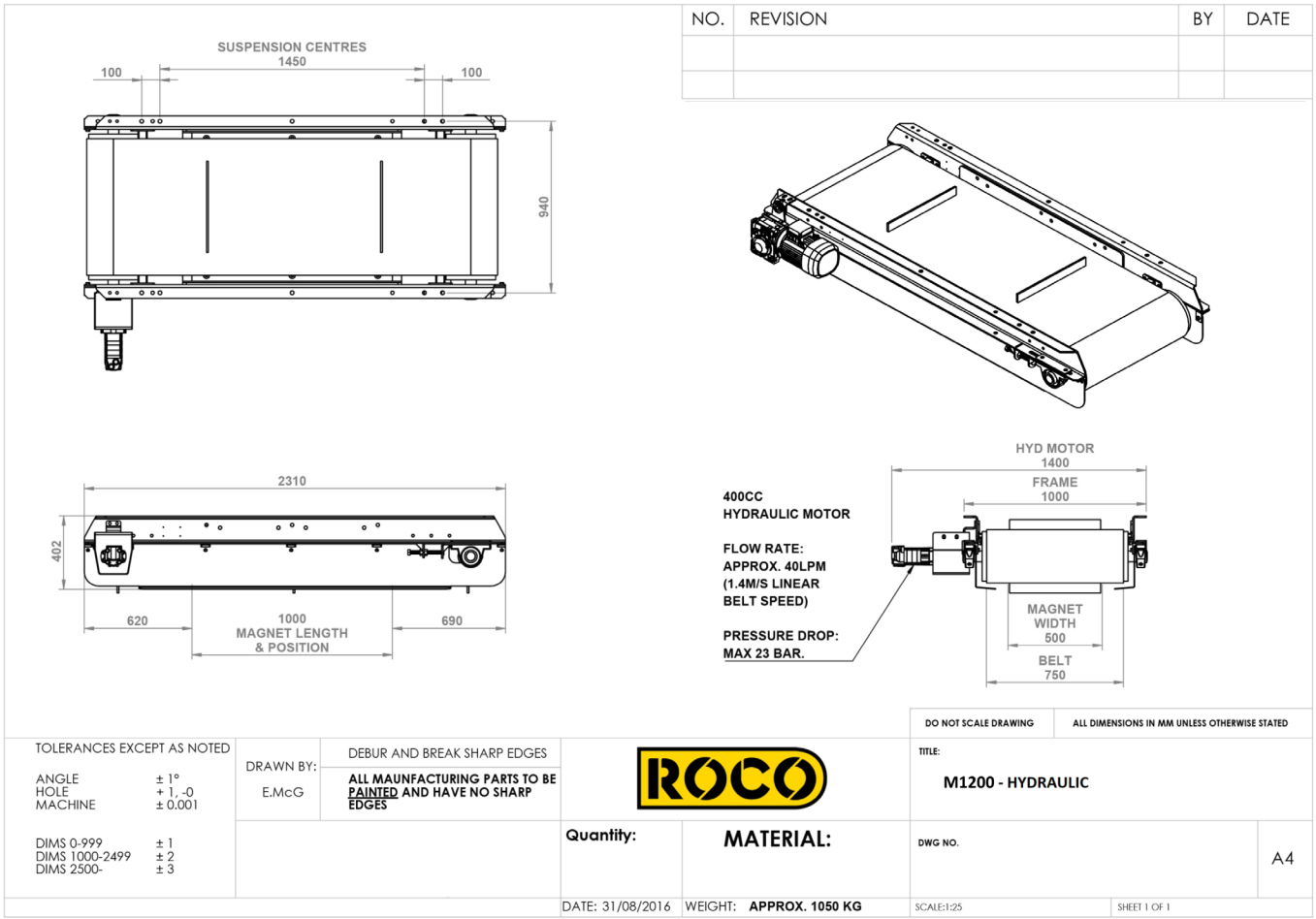

Ready for Transport

Working Position

Model	Magnet Lenght (mm)	Total Lenght (mm)	Width Without Motor (mm)	Width With Motor		Depth (mm)	Belt Width (mm)	Max Operating Gap (mm)	Approx Weight (kg
				Electric Drive	Hydraulic Drive				
M680	600	1800	1000	1200	1417	402	750	300	700
M810	800	2000	1000	1200	1417	402	750	300	900
M1200	1000	2310	1000	1200	1417	402	750	300	1050

ROCO

BY BALLYTRAIN

205A Concession Road
Crossmaglen, Newry
Co. Armagh, Northern Ireland
BT35 9JD

T +44 28 30868833
E sales@roco9.com

www.roco9.com